UNIVERSIDADE BEIRA INTERIOR

AFCEA PORTUGAL

III Encontro dos Clubes de Estudantes da AFCEA Portugal

AFCEA Covilhã Student Club

Escola Naval| May 25th, 2018

UNIVERSIDADE BEIRA INTERIOR

AFCEA PORTUGAL

AFCEA Covilhã Student Club

- History:
  - 2013: Foundation by DCA students;
  - 2013: TechNet Internacional 2013 (Lisbon);
  - 2014: "Excellent Poster Award" for *"A New Software for Propeller Design and Analysis"* article by MSc João Morgado in *6th AFCEA Student Conference* (Bucharest);
  - 2014: Club member João Morgado awarded with the AFCEA Medal for Excellence in Education (Lisbon);
  - 2015: Club member Pedro Carneiro awarded with the AFCEA Student Award upon graduating with highest score;
  - 2018: Club member Pedro Carneiro awarded with the AFCEA Student Award and an Internship at Edisoft upon graduating Master in Aeronautical Engineering with the highest score;
  - 3 publications and 6 participations in international conferences.

AFCEA Covilhã Student Club

- Active Members 2018:
  - **President:** Tiago N. Sanches
  - **1st Vice President:** Laura S. N. Martins
  - **2nd Vice President:** João P. S. Santos
  - **Secretary:** Alexandre J. R. Nunes
  - **Faculty Advisor:** Jorge M. R. Silva
  - Kawser Ahmed
  - Pedro J. F. Alves
  - Sara M. Alves
  - Cátia S. A. Simão
  - Diogo C. Morais
  - João M. N. Cleto
  - Rúben D. S. O. Meireles
  - Pedro M. C. Carneiro
  - João B. F. Sequeiros

M.Sc.

ERASMUS + Exchange Program in Poland

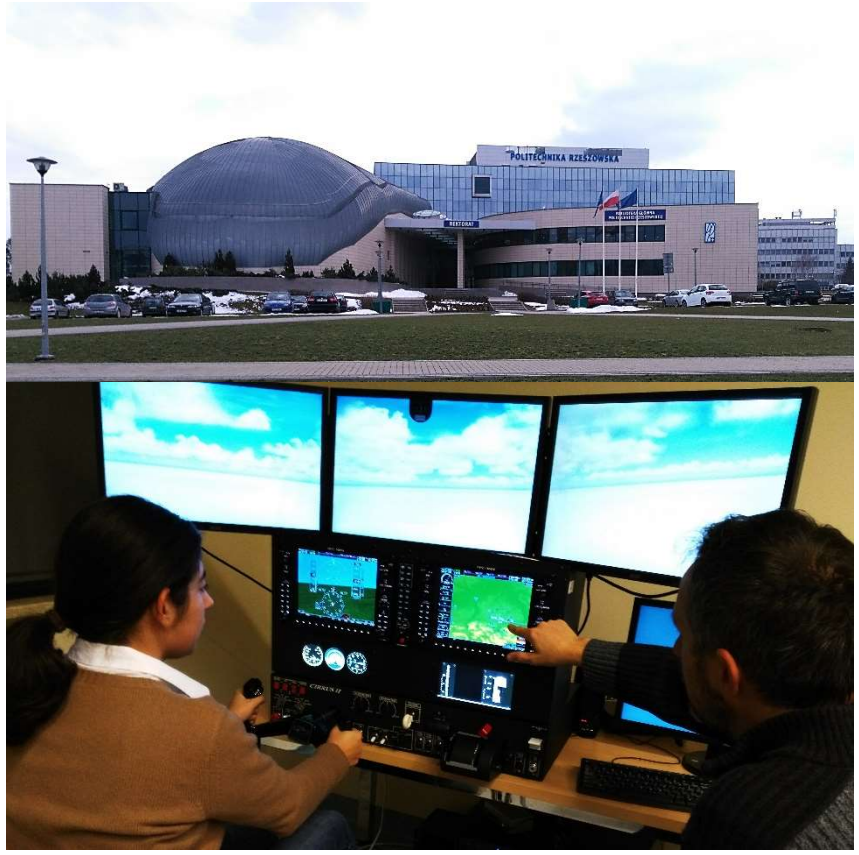

- 1 scholar year at Politechnika Rzeszowska im. Ignacego Łukasiewicza, in Rzeszów – Poland;
- MSc in Aeronautical Engineering course, focusing on Simulation and Navigation for further application on UBI projects.

M.Sc.

Shell Eco-Marathon Europe – AERO@UBI



- UBI/DCA team participation on the energy-efficient competition Shell Eco Marathon, on July 5-8, 2018, in London;
- 2017 result - 371,7km/kWh Best Portuguese Result.

Casa Civil do Presidente da República

Encarrega-me Sua Excelência o Presidente da República de acusar a receção da mensagem de correio eletrónico de V.Exa. datada de 29.06.2017, que mereceu a melhor atenção por parte desta Casa Civil, e de enviar uma mensagem de felicitações e continuação de um bom trabalho.

Ph.D.

Optimal Robust Trajectory Control of Atmospheric Flights

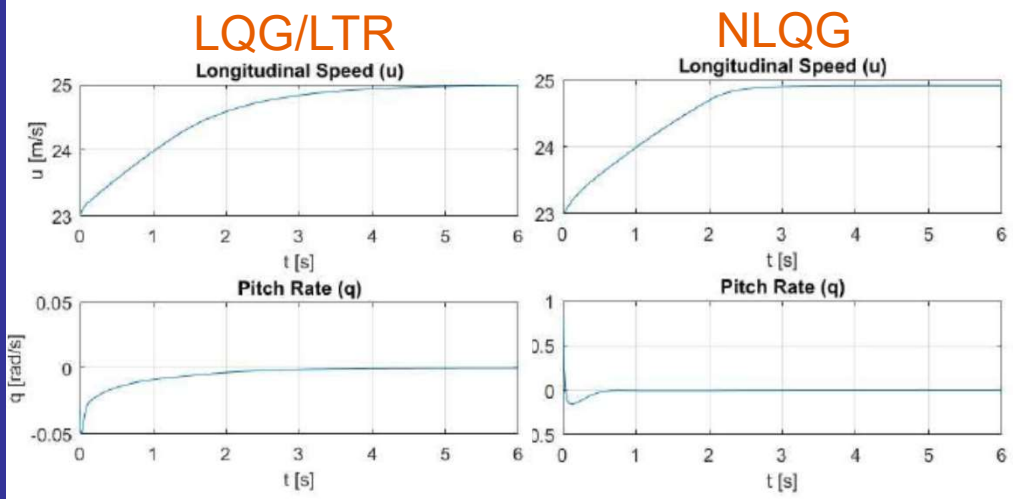

- 4D Time-constrained waypoint navigation for improved flight planning and operation;
- Improve the stand-alone capabilities of UAVs on out of reach signal range;
- Improve predictability for ATC services providers, thus increasing general aviation safety.

Dev. → Sim. → Flight Tests

Ph.D.

FireCamp2

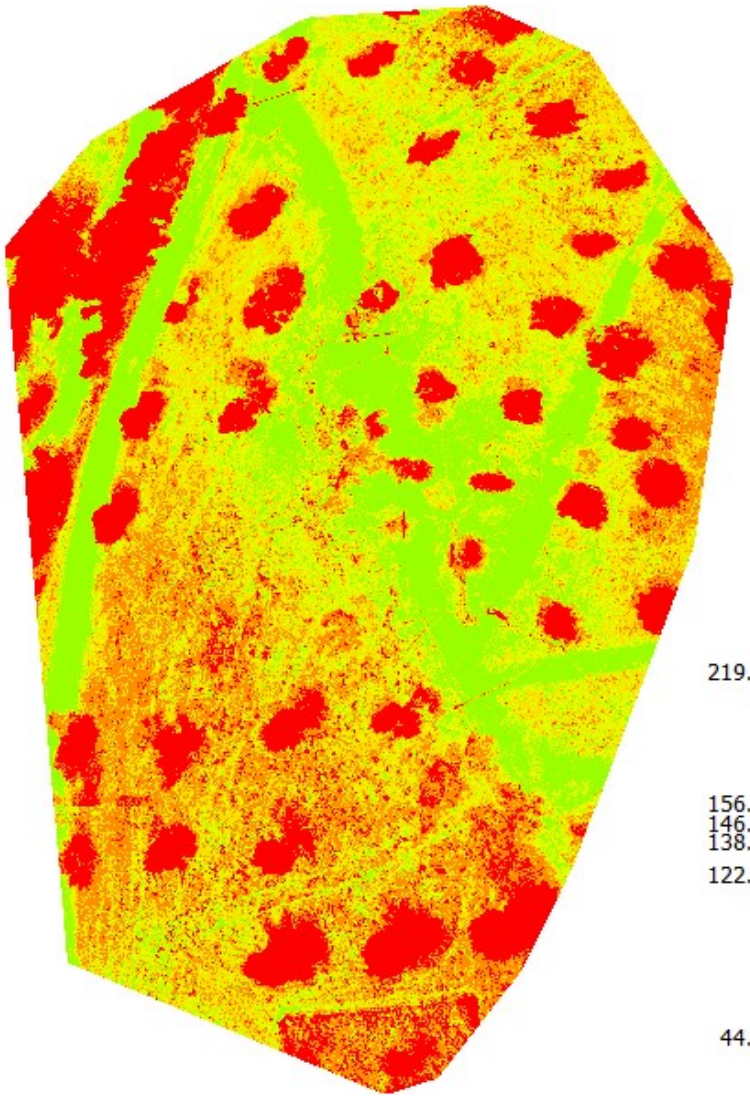

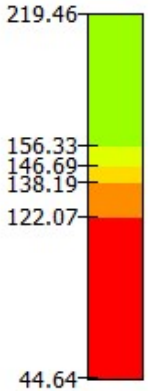

- Aerial Photography of Camping Sites;
- Identification of Combustible Areas;
- Emergency Procedures and Fire Prevention Measures.



Ph.D.

Firefighting Aircraft Operations Optimization

Aerial suppression is essential for a wildfire successful initial attack, therefore, aircraft operations must be safe and efficient. However, in Portugal:

- Accidents and incidents due to dangerous structures in the operational area and water points are recurrent;
- Difficulties finding viable/safe water points causes a first drop delay, compromising the initial attack success;
- The sparse use of fire behavior predictive tools is a flaw. Fire progression information, together with the pilot's observation capacity, may be useful to both himself and the ground forces.

Firefighting aircraft operations should be optimized considering:



Ph.D.

Firefighting Aircraft Operations Optimization

The Solution:

Decision Support System

Inputs

- Real-time climatic conditions.
- Terrain characteristics.
- Water points conditions.
- Operational situation.

Aerial hazard map

- GPS equipped.
- Water points according to aircraft characteristics.
- Landing zones/airbases.
- Updated as the fire and firefighting operations evolve.
- Model of the fire position, distribution and expectable evolution.

Outputs

A mobile device carried by the pilot shall advise:

- As the fire evolves, of the nearest viable water points, dangerous structures, permanent and temporary airbases, safe landing zones, climatic conditions;
- Through a graphical representation, about the wildfire position, distribution and expectable evolution.

Ph.D.

Development of an Opposed Piston Geared Hypocycloid Engine

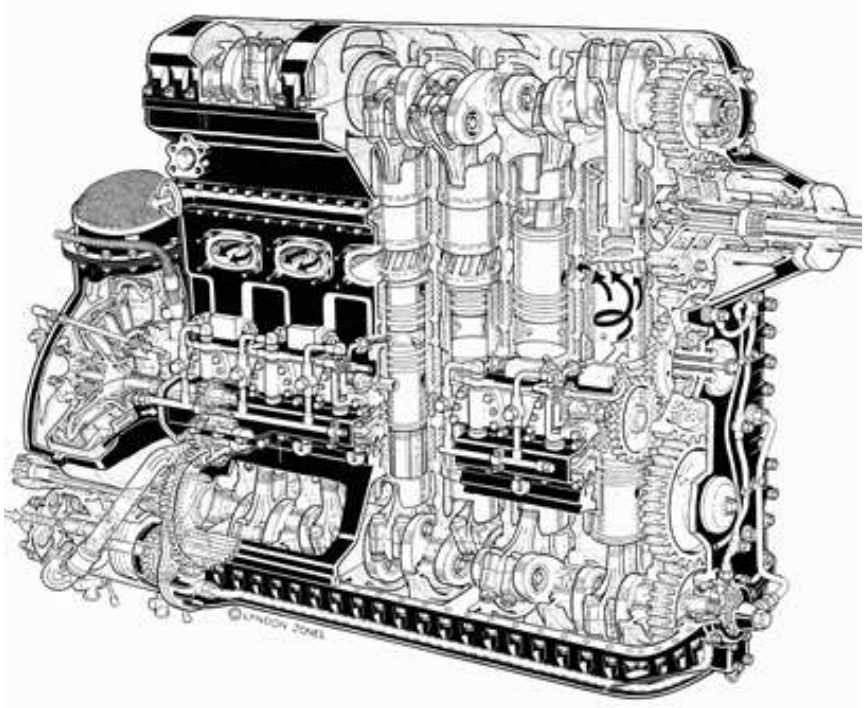

- Conventional engines are approaching their limits to meet fuel economy and emissions demands;
- Extremely high costs for the development and introduction of alternative engines and sources of energy;
- Opposed piston engines have higher specific torque, higher power/weight and power/volume ratios and superior engine balance.

Ph.D.

Development of an Opposed Piston Geared Hypocycloid Engine

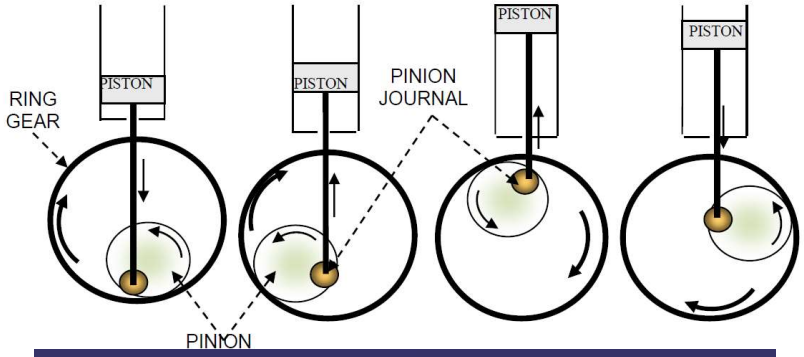

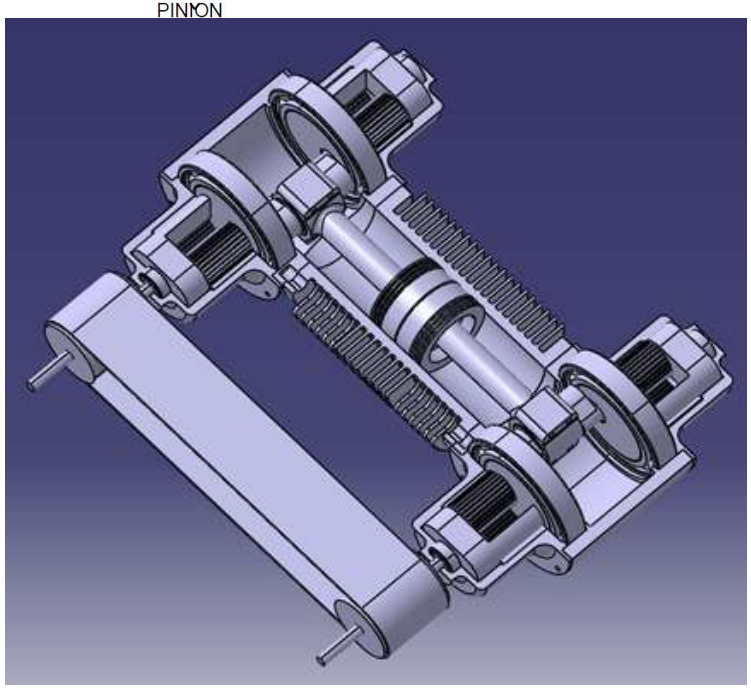

- Geared hypocycloid mechanism allows for reduced piston side-load and piston mass and a sinusoidal motion of the piston;
- Combine and implement both features proposing an alternative engine configuration to be used in aircraft applications.

Ph.D.

4D Commercial Trajectory Optimization for Fuel Saving and Environmental Impact Reduction

Airspace based operation is conventionally used today in Air Traffic Control (ATC).

- 2D and 3D trajectory optimization;
- Inefficient air traffic flow management;
- Non optimal operation for airlines.

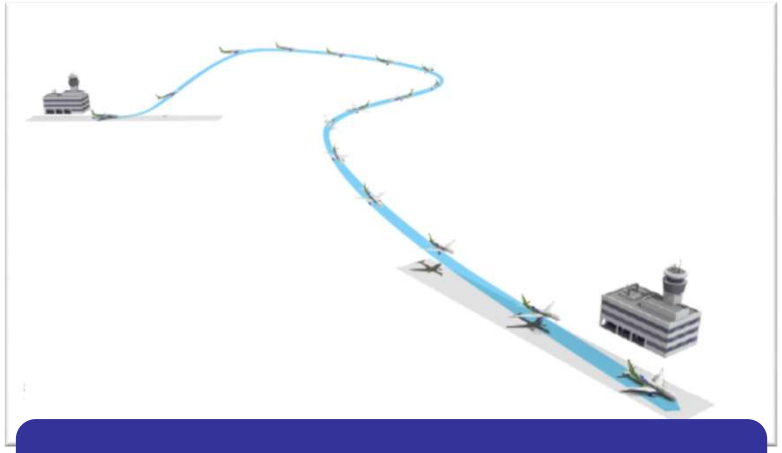

Trajectory based operation (TBO)

ADVANTAGES OF TBO:

- 4D trajectory optimization;
- Improve flight efficiency;
- Enhance air traffic capacity.

Ph.D.

4D Commercial Trajectory Optimization for Fuel Saving and Environmental Impact Reduction

The 4D trajectory of an aircraft consists of the three spatial dimensions plus time as a fourth dimension. So at any point P:

$$P = (\lambda, \varphi, h, t)$$

λ = Longitude
φ = Latitude
h = Altitude
t =time

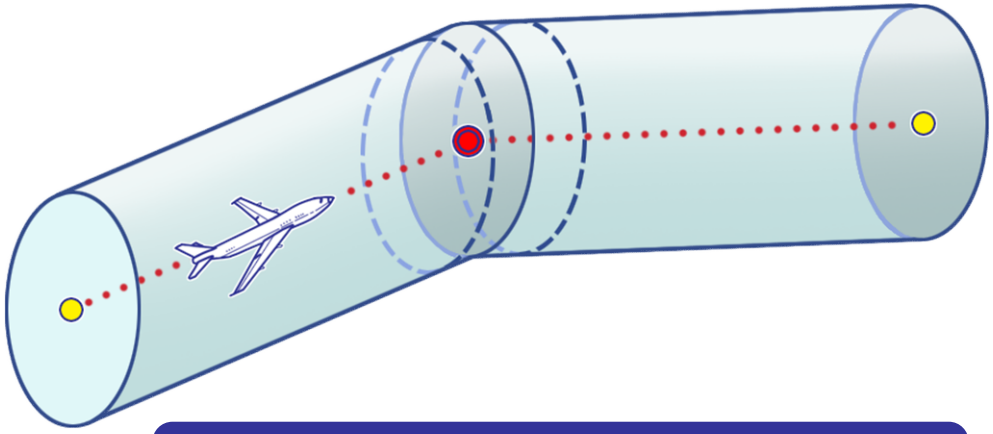

4D Trajectory Navigation

OBJECTIVES:

- Optimal 4D navigation flight planning;
- Fuel consumption optimization on 4D trajectories;
- Optimal 4D trajectories for environmental impact reduction.

Ph.D.

Forensic Box



- Portable, only requires an ethernet connection;
- Produces a report with all relevant discoveries;
- Attempt to automate and simplify part of the auditing process;
- Capable of being connected to a network, detect hosts, service versions, OS, web vulnerabilities, among others;
- Quick and does not require advanced knowledge: plug-n-play.

Ph.D.

SECURIoTESIGN

- 3-year project, starting on July 1, 2018;
- IoT security;
- Guarantee that security is taken into account in the development process of an IoT solution;
- Friendly for developers;
- Suggest security considerations and mechanisms to be implemented;
- Provide verification for the correctness of the implementation;
- Open-source framework that will encompass all tools, with ease of use in mind.

Traceability system for horticultural products



- Lack of control in products during storage and transportation;
- Food waste;
- Cheap technology that allows to trace and monitoring products.

M.Sc.

Traceability system for horticultural products

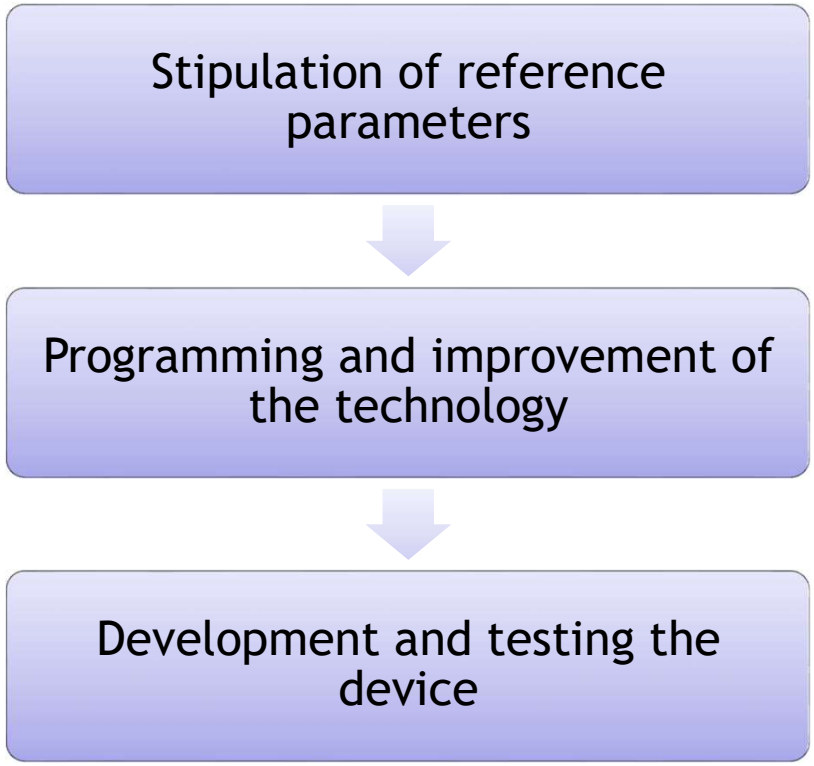

- Capable of tracking parameters like temperature, humidity or even location;
- Improving the capacity of knowledge of the product location and condition;
- Improving the product security during transportation.

UNIVERSIDADE BEIRA INTERIOR

AFCEA PORTUGAL

III Encontro dos Clubes de Estudantes da AFCEA Portugal

AFCEA Covilhã Student Club

Escola Naval| May 25th, 2018